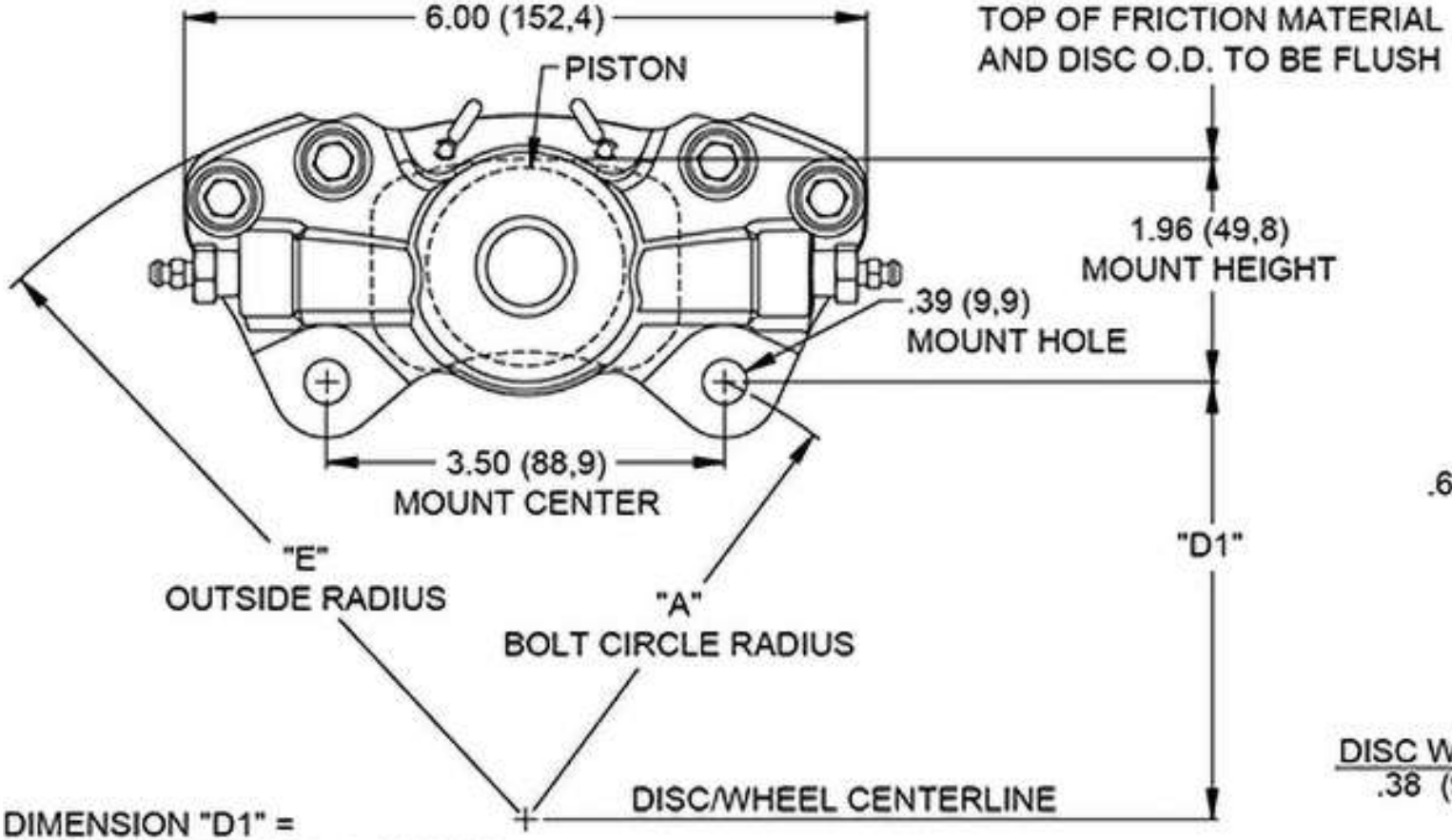

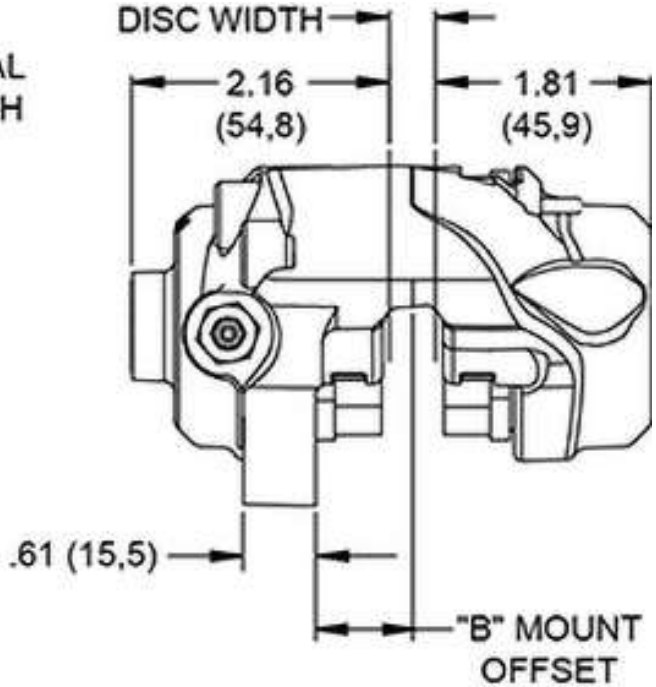

DISC WIDTH	"B" MOUNT OFFSET
.38 (9,7)	.81 (20,6)

DIMENSION "D1" =
(DISC DIAMETER/2) - 1.96 (48,8)

INLET FITTING: 3/8-24 UNF

DISC DIAMETER	"A" BOLT CIRCLE RADIUS	"E" OUTSIDE RADIUS
10.00 (254,0)	3.51 (89,2)	5.79 (147,1)